MAXWELL
TOOLS COMPANY

MAXWELL TOOLS CO.

Mfrs of Milling Cutters; Gear Cutters; Gear Hobs; Gear Shapers; Broaches

Phone No. +91-7087678450
Website : www.maxwelltools.com
www.maxwellslitters.com
E-mail : info@maxwelltools.com
info@maxwellslitters.com

About US

Maxwell Tools Co. was established in 1976 in India for manufacturing and designing HSS Cutting tools for the industry. We offer wide range of finest quality HSS Cutting & milling tools at competitive prices which makes Maxwell Tools Company unique. We have wide range of stock available also because we understand the value of your time. We also offer quick deliveries for your standard and non standard cutting tools & milling cutters with the help of our qualified, dedicated and experienced team.

Maxwell Tools provides the highest quality standard and special cutting & milling tools. These milling tools offer both productivity and value to our customers.

Precision Cutting Tools & Gear Milling Cutters are shipped worldwide.

Mr. Rajiv Gupta

CEO

TERMS OF SALE

Guarantee: All Material Is Fully Guaranteed Against Defects In Material Or Workmanship
Shipping Terms: We Ship Domestic Shipments By First Flight/Overnite/Spoton Export Shipments Thru'dhl/Fedex
Terms Of Payment: Advance Tt/Credit Card/Paypal
Quotation Service: We Solicit The Opportunity To Quote On Your Needs. Quotations Are Valid For 30 Days.
Note: Maxwell Is Not Responsible For Any Cutting Tool That May Break Or Shatter Under Improper Use.

Maxwell now accepts

MasterCard VISA

Our Products

GEAR HOB

- Material : HSS M2;M35;ASP 30 & 60
- Available in Class : ;AAA;AA; A; B & C as per DIN 3968 or equivalent AGMA, JIS standard

TOOTH PROFILE: The teeth profiles are enhanced to ensure they offer added strength while reducing the noise of the gears themselves. Reducing the noise of the gears and giving them added strength means that customers can be sure that they are getting the highest quality. Saving them not just money but the time they would otherwise waste waiting for replacement parts.

Types : Bore & Shank type
Accuracy : AAA/AA/A/ as per DIN 3968
Multi-gashes
Multi-start
Shoulder Clearance type
Ordering Instruction :- Module / DP ; RH / LH

GEAR SHAPERS

There are different types of shaper cutters. They are broadly grouped as

MODELS :-

- Disc Type
- Deep Counter Bore
- Hub Type
- Shank Type

Each of these types is used in a different environment. It comes with particular specifications but with the possibility to modify the standard design during production. This will adapt the cutter for your specific cutting environment.

RANGE

Module : 0.5 to 20 Module
DP - 50 to 1.25 DP
Max diameter : 300mm (12”)
Accuracy : AA, A and B as per DIN 1829
Ordering Instruction :- Module Required

CONCAVE CUTTERS

Material : HSS M2; M35;ASP 2030
Coatings available on request

Applications :

Used to produce true convex radius. These cutters are made for milling half circles and may be sharpened Without changing their form by grinding the face.

Ordering Instructions :- Diameter of Circle; Radius ; thickness

GEAR MILLING CUTTER (DP/MODULE)

Material : HSS M2;M35;ASP 2030
Involute cutters offer the following features;
For gears with a pressure angle of 20 degree of 14-1/2 degrees.

- A relievable form that allows you to reshape as many times as possible without altering the form.
- The cutters are customized for each pitch.
- Cutters of sizes 12 module and above offer more accuracy when ordered in sets of 15. The 1/2 cutters are available in dimensions of 1.5, 2.5, 3.5, 4.5, 5.5, 6.5 and 7.5.
- Sizes beyond the 9 module and a wider range of metric cutter bores are manufactured on order.

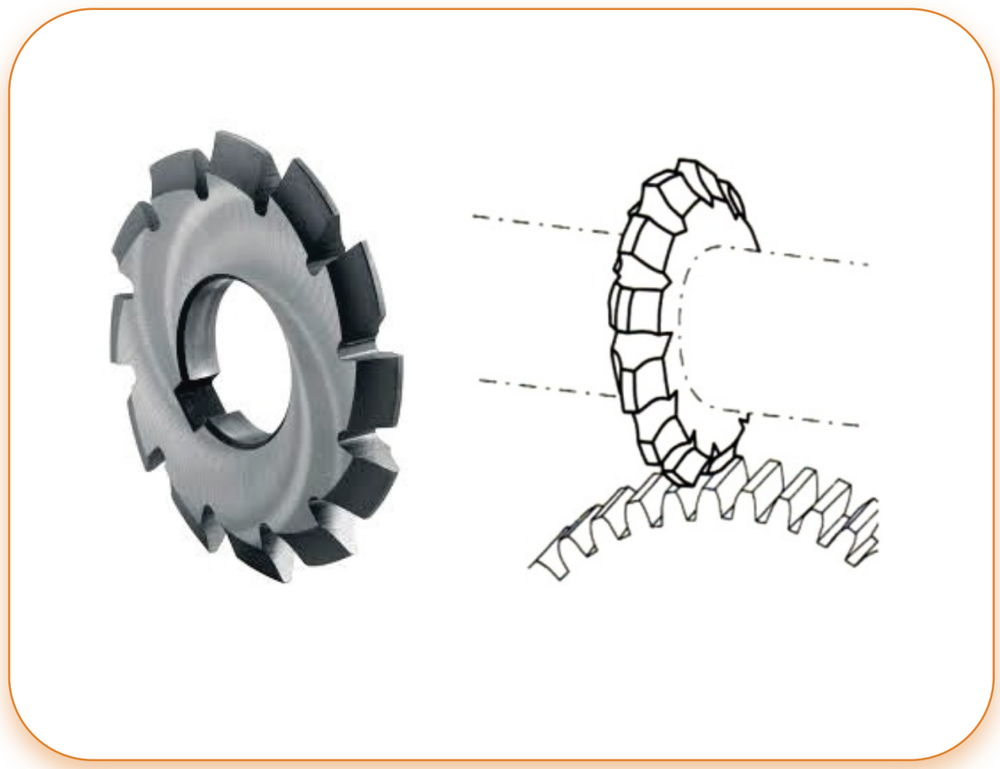

Cutter No.	Teeth	Cutter No.	Teeth
1	135 to rack	5	21 to 25
2	55 to 134	6	17 to 20
3	35 to 54	7	14 to 16
4	26 to 34	8	12 to 13

Note: We manufacture upto 50 Module.For more information;please log on to http://www.maxwelltools.com/useful-tips.html

Ordering Instructions: Please state Diametral Pitch OR MODULE and the number of cutter desired from the above chart according to the number of teeth to be cut.

We also Quote Spline & Bevel Cutters!

SPROCKET MILLING CUTTERS

Material : HSS M2;M35;ASP 2030

Technical Specifications

Sprocket milling cutters are also referred to as Rotary Form Cutters. They are manufactured in three standards generally named as 1, 2 and 3. These standards are identified by the number of teeth cut. Number 1 has between 9 and 12 teeth while number 2 has between 12 and 19. Any cutter that is beyond 20 teeth is classified as number 3.

No.	Teeth Cut
1	9 to 12
2	12 to 19
3	20 and over

These Cutters are also manufactured confirming to American, Indian and DIN Standards. Prices on request.

Ordering Instructions: Pitch and Roller Diameter (R.D)

Note : Coatings available on every tool.

CONVEX CUTTER

- Material : HSS M2;M35;ASP 2030
  Coatings available on request

APPLICATIONS:

To carve out the true concave radius.These cutters are made for milling half circles and may be sharpened without changing their form by grinding the face.

Ordering Instructions :- Diameter of Circle; Radius ; thickness

CORNER ROUNDING CUTTERS

Corner rounding milling cutters are designed for corner radius on arbor type milling machines. They may be used individually or in pairs. These cutters have side and radial clearance and can be sharpened by grinding the face without changing their forms. When ordering, specify whether right hand or left hand cutters are wanted.

Ordering Instructions :- Radius ; LH / RH

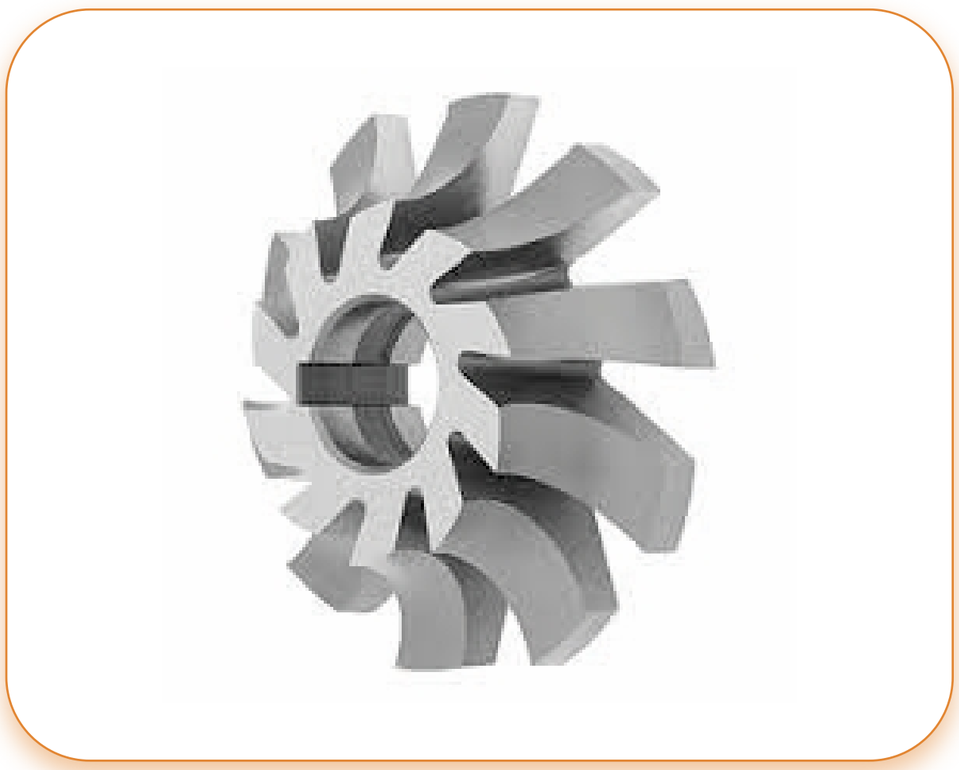

SIDE & FACE CUTTERS

- Material : HSS M2; M35;ASP 2030

Applications :

The Maxwell Side Face is distinguished by the presence of teeth on both the side and circumference. They come in two types
Straight Teeth
Staggered teeth

Ordering Instructions :- Diameter ; Thickness Bore, Teeth Type

ANGLE MILLING CUTTERS

- Material : HSS M2;M35;ASP 2030
  Coatings available on request

Types of Angle Milling Cutters

The single angular cutter - This has teeth on the surface at 30, 45 or 60 degrees. This makes it ideal for some areas depending on desired outcome. It means that you can only cut along a single angle and not both edges. It will either be on the right or left depending on what you are milling.

The double angle cutter - Double angle cutters are available in 45°, 60°, and 90° included angles.

Ordering Instructions :- Diameter ; Thickness Bore, Angle

SHELL ENDMILLS

Shell Mills are designed for both end and facemilling operations and confirm to the American Standard for Milling Cutters. They will fit standard shell endmill arbors. Right hand cutters with right hand helix and left hand cutters with left hand helix are standard.

Ordering Instructions : Diameter ; Overall Length Bore LH / RH

HACKSAW MILLING CUTTERS

- Material : HSS M2;M35;ASP 2030
  Coatings available on request

The hacksaw milling cutter is manufactured using the highest quality material. It has a very robust structure that makes it ideal for different work scenarios. It is manufactured using M35 and HSS-M2 type of steel between 4TPI and 32TPI. It also comes with a diameter of 40-90 mm. The cutter measures between 6 and 14 inches on the cutting edge.

Ordering Instructions : Diameter ; Pitch, Length, Bore

SERRATION CUTTERS :

- Material : HSS M2;M35;ASP 2030
  Coatings available on request

Maxwell Serration Cutters are made from the highest quality raw materials available in the market. They are best suited for clamping surface. The common industries using these cutters include agriculture and automation. Their fine tooth features enable them to produce smooth cuts on all surfaces.

Ordering Instructions : Diameter ; Pitch, Length, Bore

SLITTER CUTTERS:

Material : HSS M2;M35;ASP 2030, D2/D3
Coatings available on request

The specifications of slitter cutters depend on the application. This makes the cutter one of the tools that are open to customization. Maxwell Tools produces excellent quality products following the precise instructions given by clients. There is a Lapping machine that ensures that the highest level of precision is achieved.

We Supply within standard 5 to 7 microns in flatness & parallelity.

Ordering Instructions : OD;ID;Thickness.

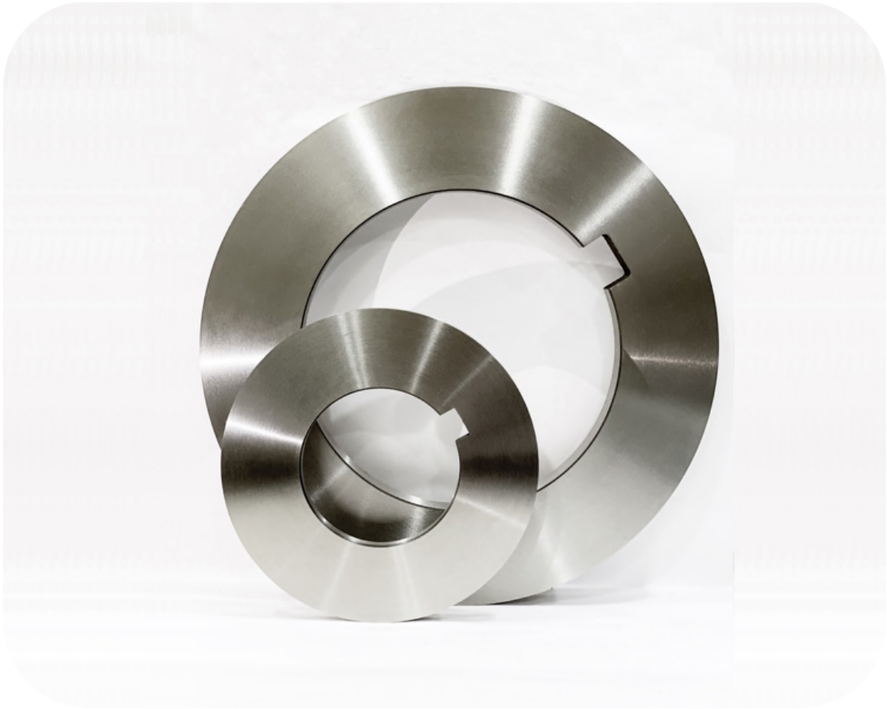

HSS Slitting Saws :

Material : HSS M2;M35;ASP 2030
Coatings available on request

1. Screw-Slitting Saws-Tooth Form "A"
2. Tube Cutting Slitting Saw-Tooth From "BW"
3. Side Chip Clearance Slitting Saw
4. Staggered Tooth Slitting Saw
5. Simple/Plain Slitting Saws

Ordering Instructions : OD;ID;Thickness.

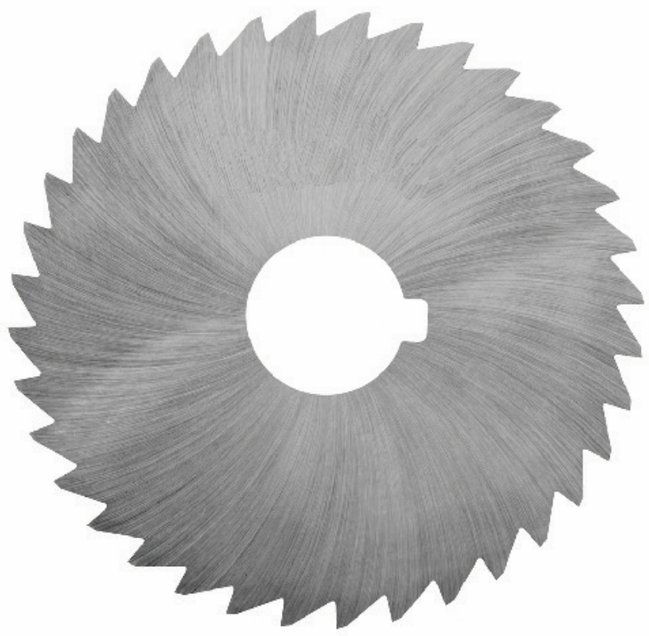

CIRCULAR PAPER KNIVES

- **Material : HSS M2;M35**
  Paper cutters used in paper industries. They are used for giving shapes in cigerate paper, tissue paper thread cones etc.

  Ordering Instructions : Diameter, Thickness & Bore

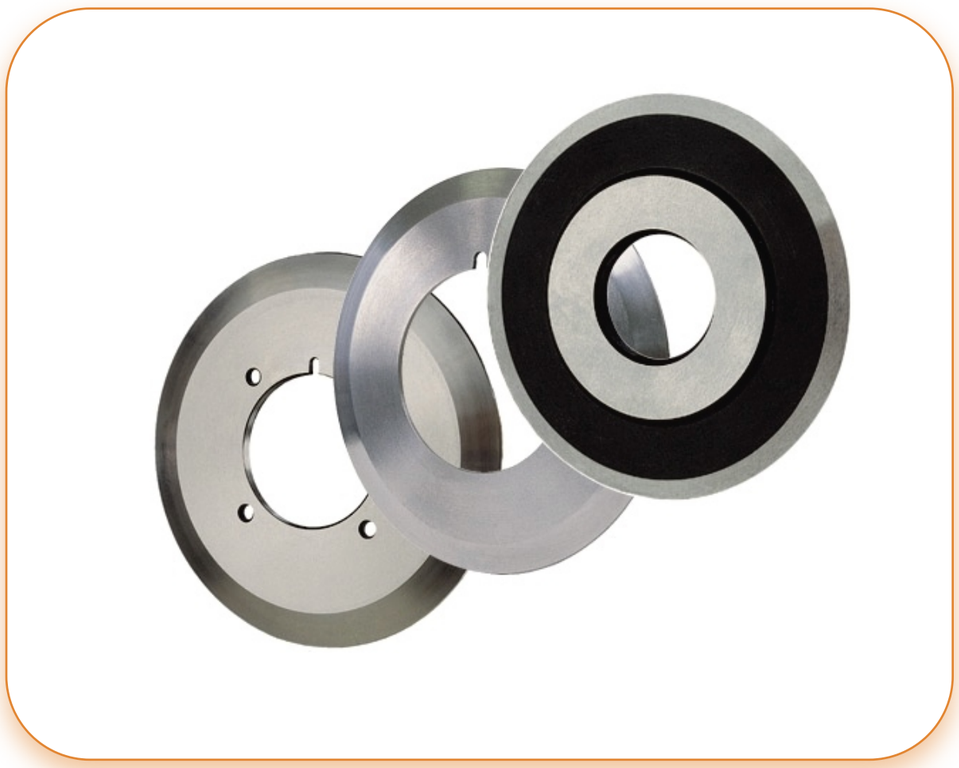

SCALPING CUTTER/CYLINDRICAL CUTTER

Material : HSS M2;M35;ASP 2030
Coatings available on request

Scalping and Cylindrical Cutters are manufactured from 2" dia to 12" dia & length from 2" to 40" in light & heavy duty. These are used for scalping copper & brass strips. Material used is imported high speed steel in M2 & M35 grade.

" in light & heavy duty. These are used for scalping copper & brass strips. Material used is imported high speed steel in M2 & M35 grade.

Ordering Instruction
When filling out an order form for scalping cutters you will need to include: OD, length (OAL), bore, and helix angle.

HSS TOOL BITS

Material : HSS M2;M35;ASP 2030
Coatings available on request

The varieties available include: -

- Round tool bit
- Square tool bit
- Lathe tool bit
- Rectangular tool
- Parting tool bit

BROACHES

Material : HSS M2;M35;ASP 2030

Maxwell manufactures both standard and special Broaches in either push or pull styles, including all types of round broaches, Spline broaches, keyway broaches, internal hole, and surface broaches.

Broaches are made to suit component specifications, customer's machine and holder details.

Different internal profiles are undertaken for manufacture like:

- Splines - involute, parallel and trapezoidal
- Serrations
- Round
- Haxagonal
- Rectangular
- Ratchet

Spline Broaches, Round broaches, Keyway broaches and special form broaches for internal hole can be had on request.

DOVETAIL CUTTER :

Material : HSS M2;M35;ASP 2030
Coatings available on request

Maxwell Dovetail cutters are used to produce the sliding dovetail joints. These joints are common on the side of book cases and also keep wide boards from cupping. They are effective in producing both the tail and the pin. This is a very strong joint and is widely used in chests, drawers, boxes and shelves. It strengthens the right angle formed by two wooden planes.

REAMERS :

Material : HSS M2;M35;ASP 2030
Coatings available on request

Reamers come in such categories as Hand, Shell, Hand Pin, Machine and Chucking reamers. They are common tools in metal work and are used for enlarging holes. The expected dimensions of the hole and the surface being drilled determine the type of reamer to use. Each reamer has a different thickness and type of cutting the tip.

Maxwell Tools manufactures reamers that are adjustable. The other varieties available include:

- Judy
- Ridge
- Tapping reamers

T-SLOT MILLING CUTTERS

- Material : HSS M2;M35;ASP 2030
  Coatings available on request

  Features

  These cutters have

  - Staggered teeth
  - Side teeth

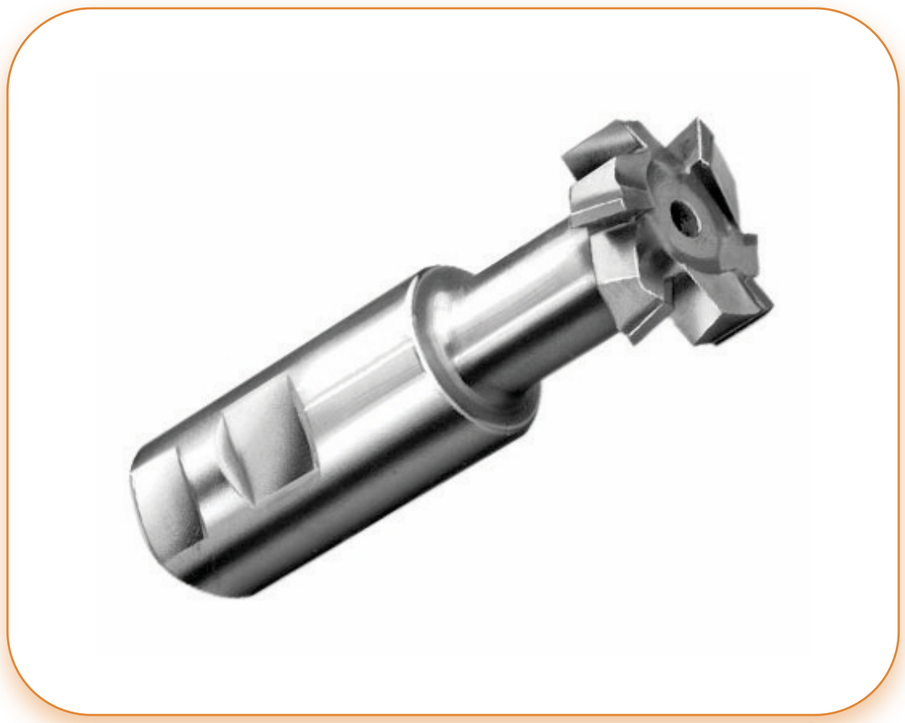

DRILLS

Material : HSS M2;M35;ASP 2030

All of our HSS drill bits are manufactured to a very high standard and have a bright finish applied. We hold large stock quantities of all sizes from 1mm through to 13mm.

CENTRE DRILLS

Double ended tool for centering prior to drilling or for producing a countersink from, for lathe centre location.

Suitable for both hand and machine use.

CIRCULAR SEGMENTAL SAWS ; SPARE SEGMENTS

Chrome vanadium steel built segmental circular saw blades help to minimize repair costs.These are made with hardened toothed segments rivited to the periphery. This construction makes it possible to repair a segmental saw blade after heavy tooth or segment damage, by simply replacing one or more segments. We produce segmental circular saw blades in diameters from 250 mm to 1610 mm in various tooth profiles.

CUTTER DATA APPLICATION

FEEDS AND SPEEDS FOR MILLING

	Speed (SFM)	Speed (FPT)
Type of Material	**HSS**	**HSS**
Aluminum and Magnesium	600 & up	.005 - .025
Brass and Bronze - Soft	250 - 300	.005 - .020
Brass and Bronze - Hard	150 - 200	.003 - .010
Copper	150 - 200	.005 - .015
Cast Iron - Soft	75 - 100	.005 - .015
Cast Iron - Hard	50 - 75	.003 - .007
Steel - 100 BHN	125- 175	.004 - .010
200 BHN	70 - 90	.004 - .010
300 BHN	40 - 50	.003 - .005
400 BHN	20 - 30	.001 - .003
500 BHN	10 - 15	.001 - .003
Stainless Steel - Hard	35 -70	.003 - .005
- Free Machining	70 - 105	.003 - .005
Titanium - under 100 K PSI	35 - 55	.003 - .005
100 K - 135 K PSI	25 - 35	.002 - .005
135 K PSI and over	15 - 25	.001 - .005
High Temperature Alloys :		
Ferritic Low Alloys	40- 60	.002 - .005
Austenitic Alloys	20 - 30	.001 - .004
Nickel Base Alloys	5 - 20	.001 - .003
Cobalt Base Alloys	5 -10	.001 - .003

STANDARD KEYWAYS FOR CUTTERS

Cutter BORE "A"	NOMINAL KEYSIZE (SQUARE)	C MAXIMUM	C MINIMUM	D MAXIMUM	D MINIMUM	H NOMINAL	CORNER RADIUS
1/2	3/32	.106	.099	.5678	.5578	3/64	.020
5/8	1/8	.137	.130	.7085	.6985	1/16	1/32
3/4	1/8	.137	.130	.8325	.8225	1/16	1/32
7/8	1/8	.137	.130	.9575	.9475	1/16	1/32
1	1/4	.262	.255	1.1140	1.1040	3/32	3/64
1 1/4	5/16	.325	.318	1.3950	1.3850	1/8	1/16
1 1/2	3/8	.410	.385	1.6760	1.6660	5/32	1/16
1 3/4	7/16	.473	.448	1.9580	1.9480	3/16	1/16
2	1/2	.535	.510	2.2080	2.1980	3/16	1/16
2 1/2	5/8	.660	.635	2.7430	2.7330	7/32	1/16
3	3/4	.785	.760	3.2750	3.2650	1/4	3/32
3 1/2	7/8	.910	.885	3.9000	3.8900	3/8	3/32
4	1	1.035	1.011	4.4000	4.3900	3/8	3/32
4 1/2	1 1/8	1.160	1.135	4.9630	4.9530	7/16	1/8
5	1 1/4	1.285	1.260	5.5250	5.5150	1/2	1/8

TIN COATING

Titanium Nitride is bright gold and still the most popular coating.
TiN has a surface hardness up to 83 HRC with a low friction coefficient.
High lubricity and corrosion and heat-resistance facilitate chip flow and resist built-up edge and chip welding that is especially effective on aluminum, stainless steel and other alloy materials.
Titanium Caronitride has a higher hardness reaching 88 RC and has greater lubricity than TiN.
TiCN is bronze in color with a coefficient of friction of .3 and has up to 840 degree F thermal stablitiy.
With operating parameters approaching tungsten, this coating runs at very aggressive feeds and elevated speeds.

HIGH PERFORMANCECoatings available on every tool in this catalog.

MAXWELL
TOOLS COMPANY

Mfrs of Milling Cutters; Gear Cutters; Gear Hobs; Gear Shapers; Broaches

 # 3, Industrial Estate, RAJPURA - 140 401
Tel. +91 7087678450 , Fax : +91-1762-223372
Website : www.maxwelltools.com www.maxwellslitters.com
E-mail : info@maxwelltools.com info@maxwellslitters.com